Technische Warenservice GmbH

TEC

Service-Unterlagen

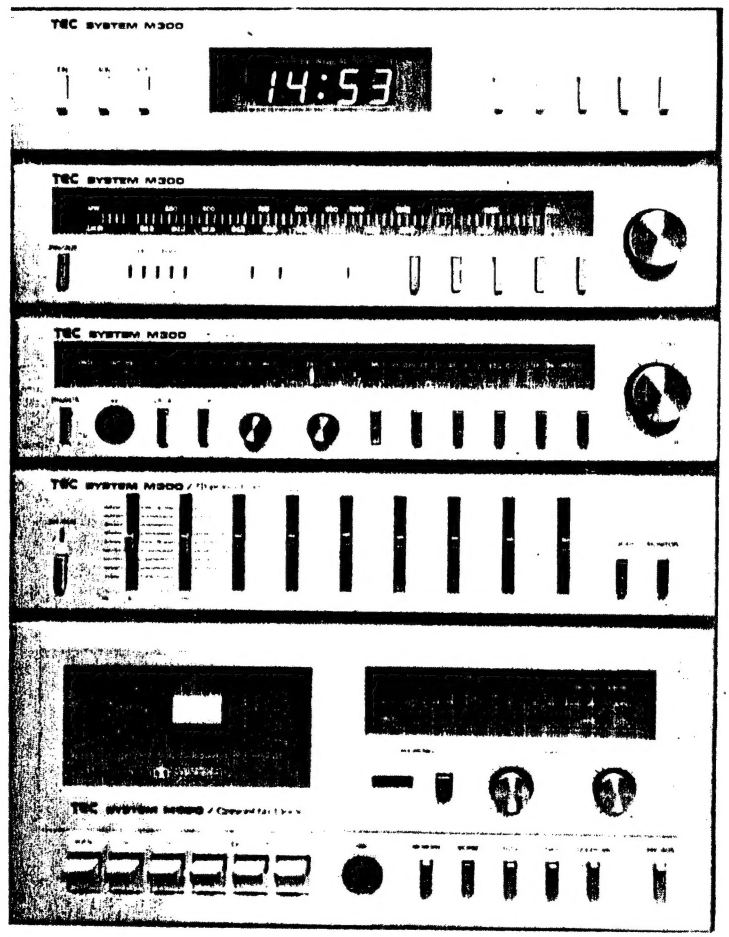

TEC–System M 300

Geräte-Typen 29/56-60

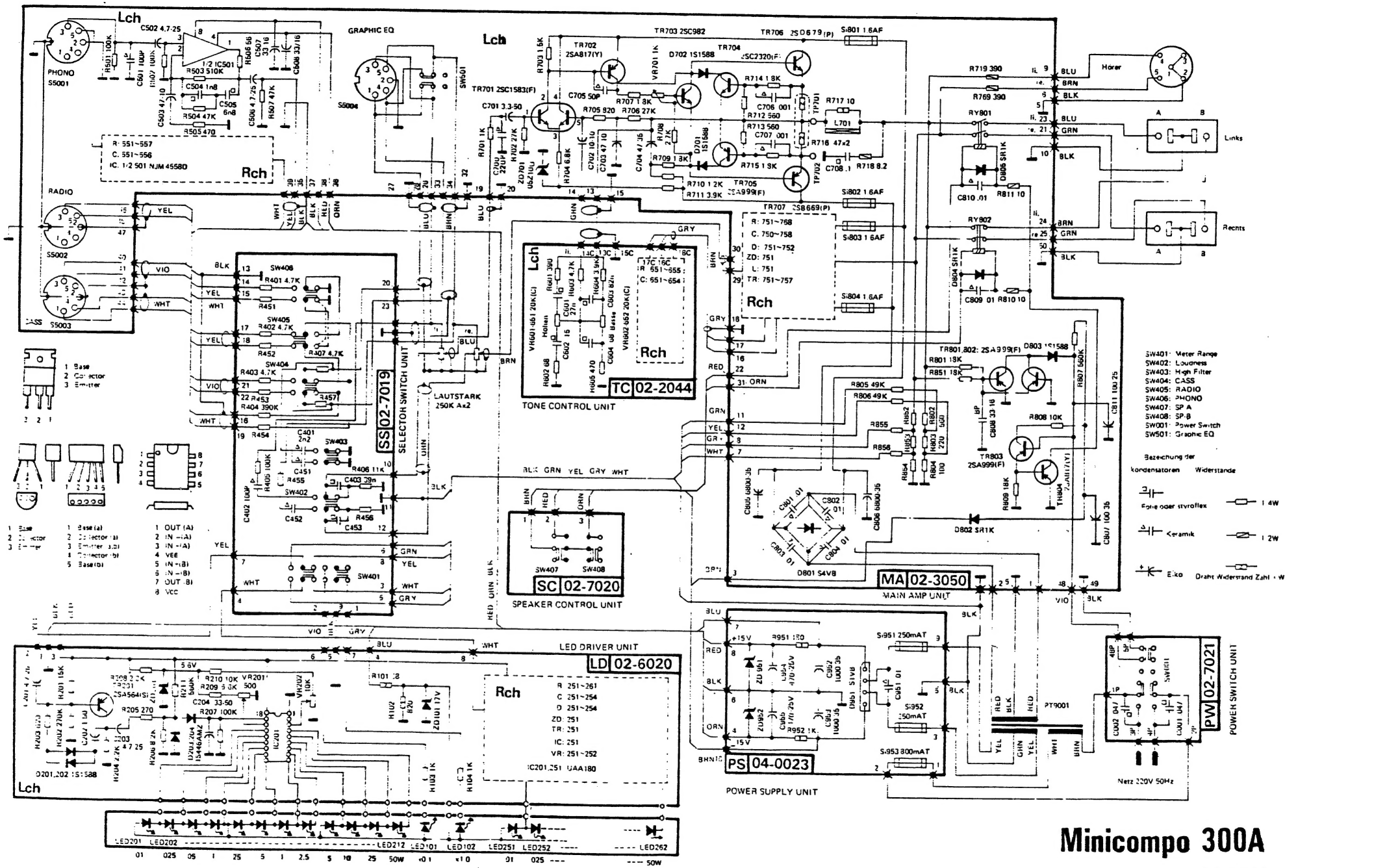

Minicompo 300A

01-3301

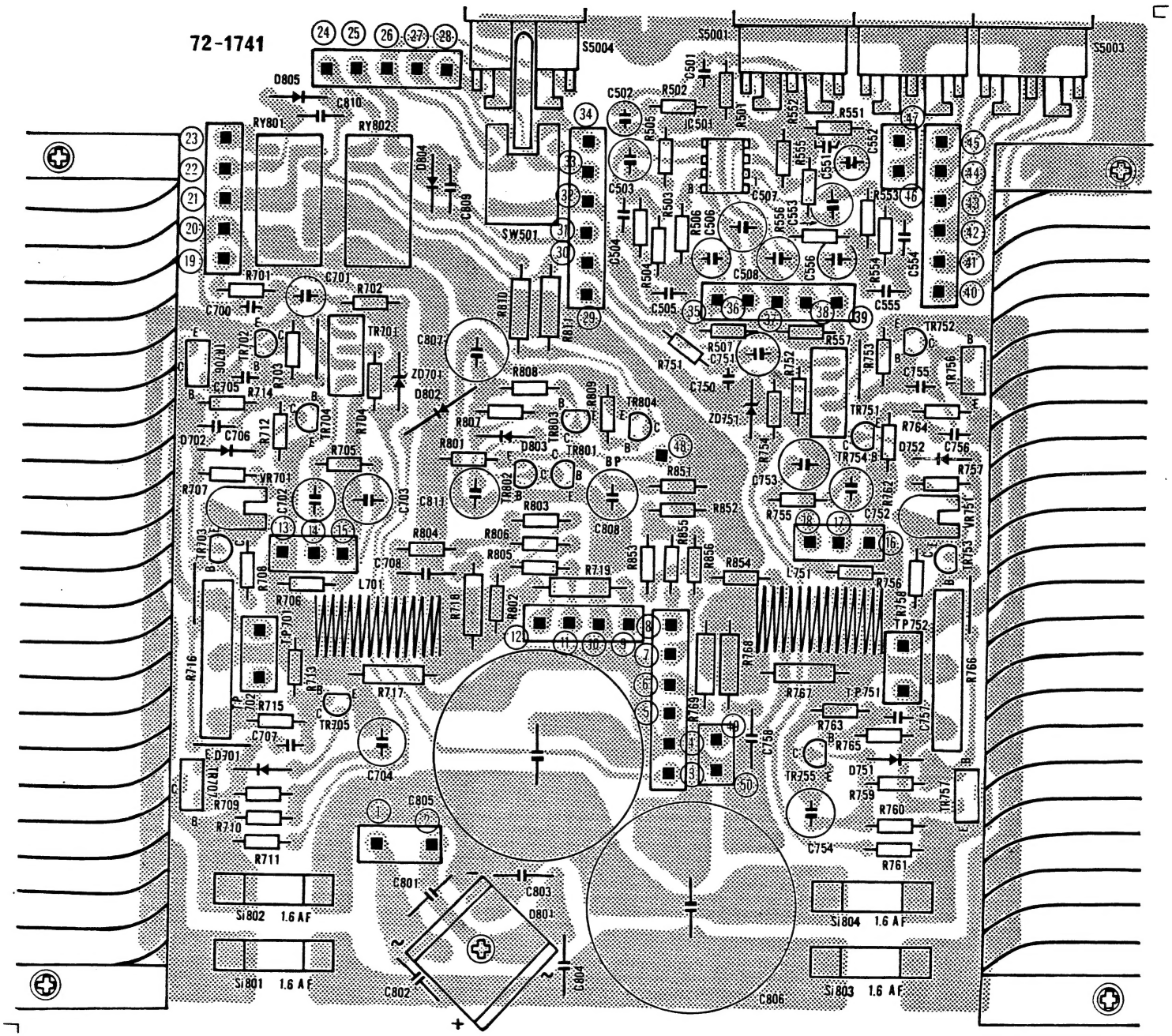

COMPONENT LOCATION – MAIN AMP. UNIT (MA 02-3050)

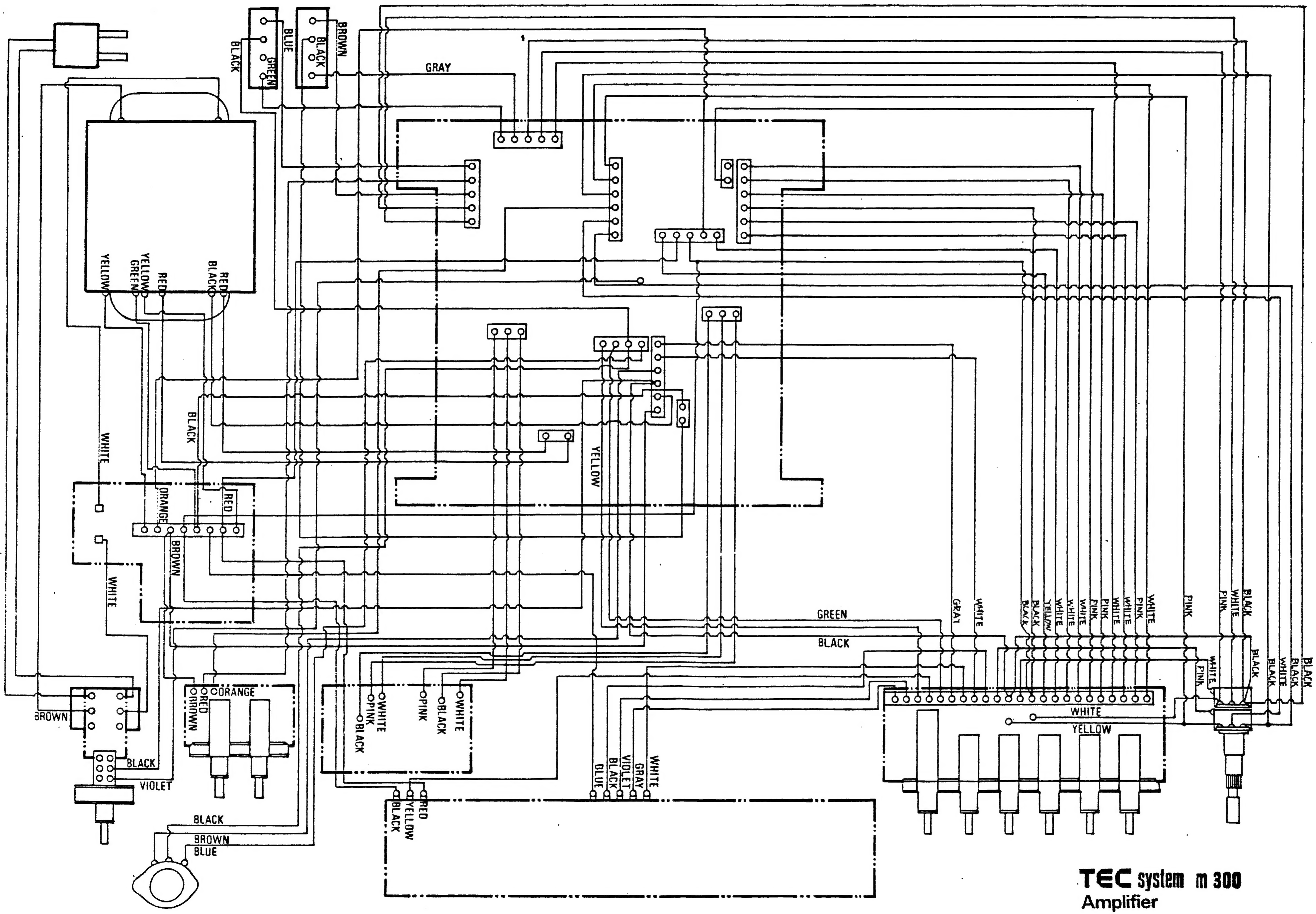

TEC system m 300
Amplifier

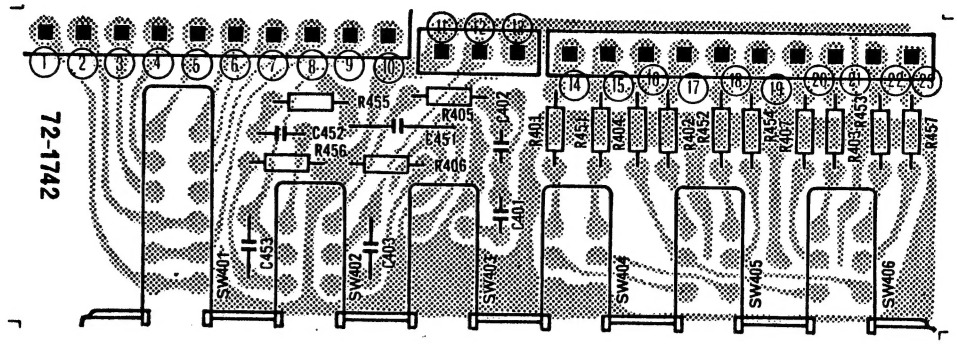

COMPONENT LOCATION – SELECTOR SWITCH UNIT (SS 02-7019)

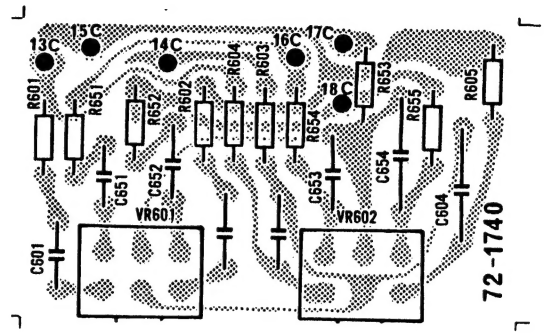

COMPONENT LOCATION – TONE CONTROL UNIT (TC 02-2044)

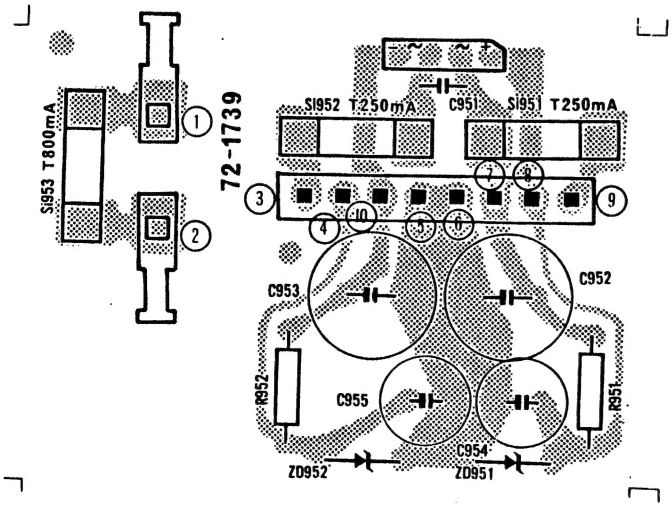

COMPONENT LOCATION – POWER SUPPLY UNIT (PS 04-0023)

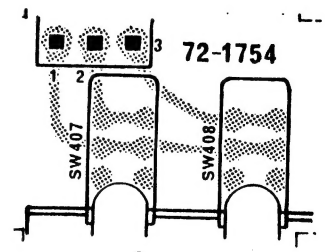

COMPONENT LOCATION –
SPEAKER CONTROL UNIT (SC 02-7020)

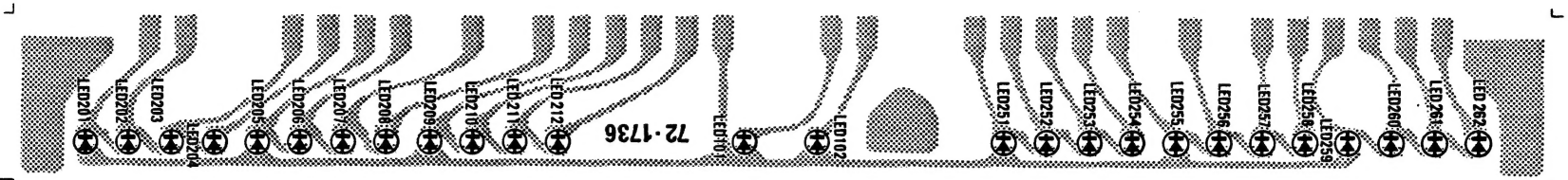

COMPONENT LOCATION – LED UNIT (LD 02-6020)

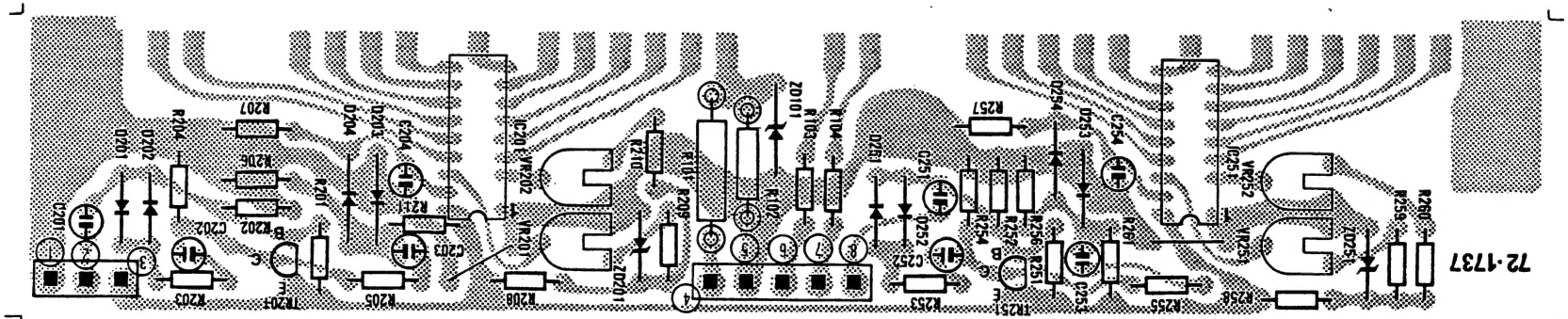

COMPONENT LOCATION – LED DRIVER UNIT (LD 02-6020)

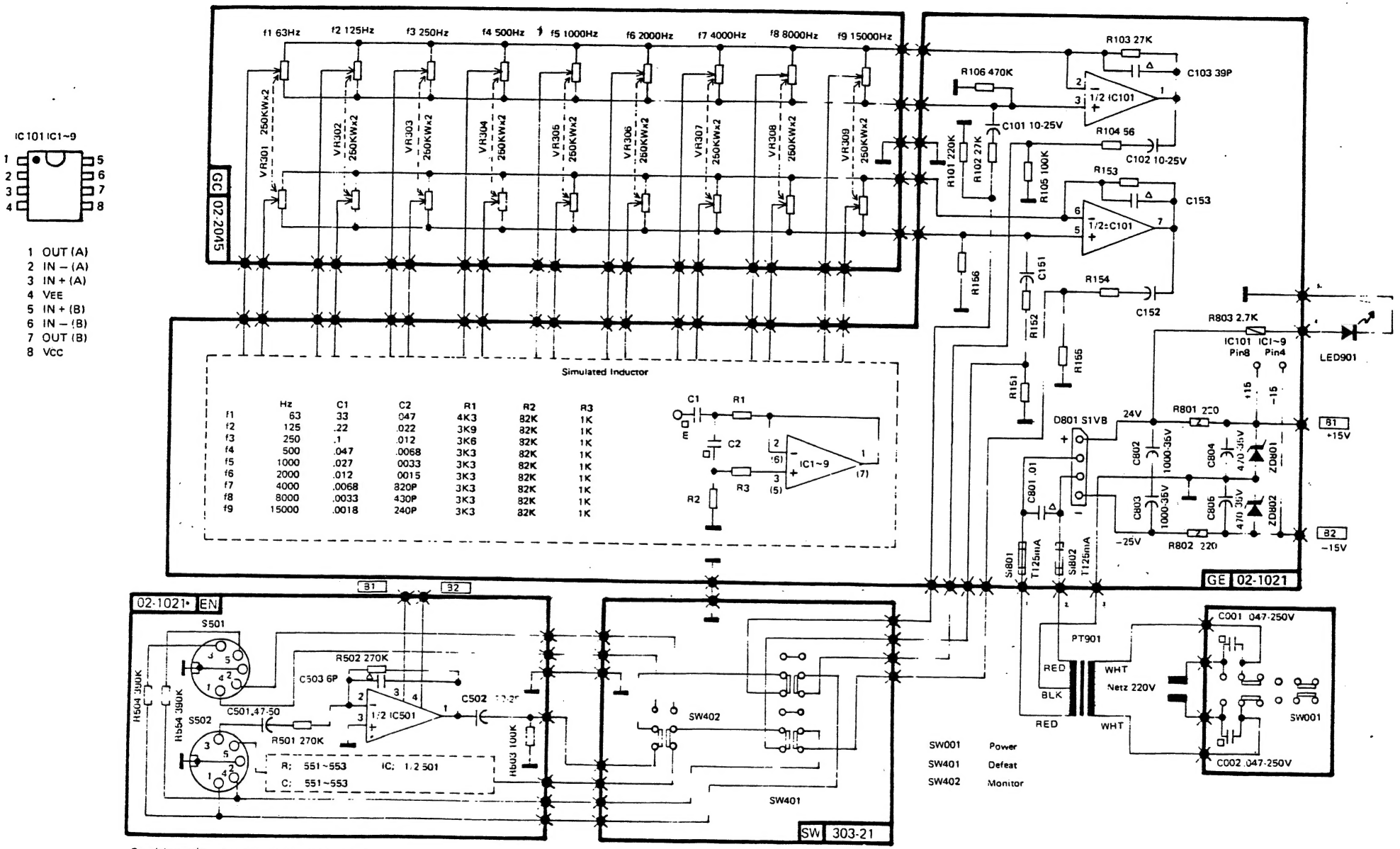

Minicompo 300E

01-3303

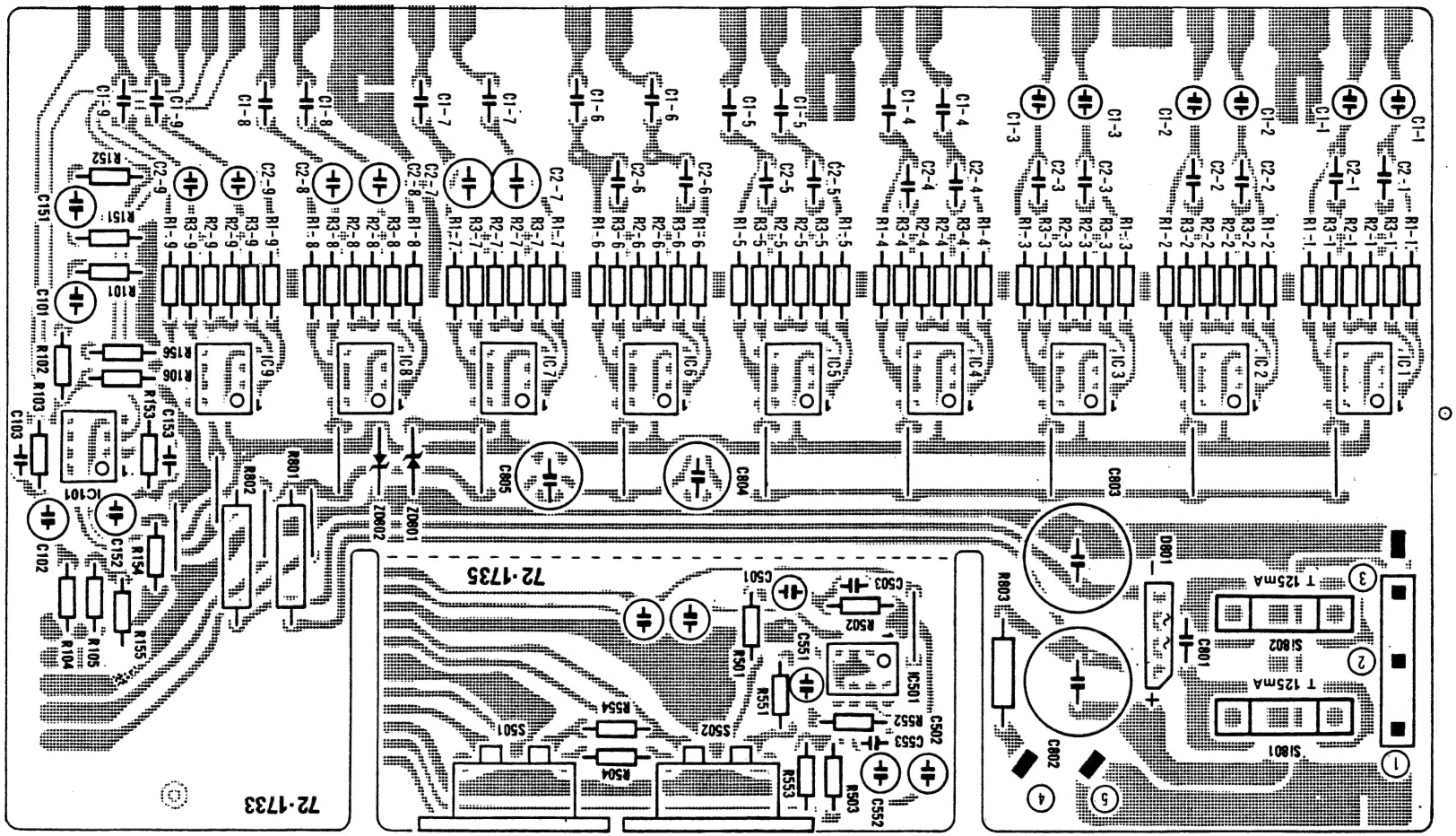

COMPONENT LOCATION – EQ UNIT (GE,EN 02-1021)

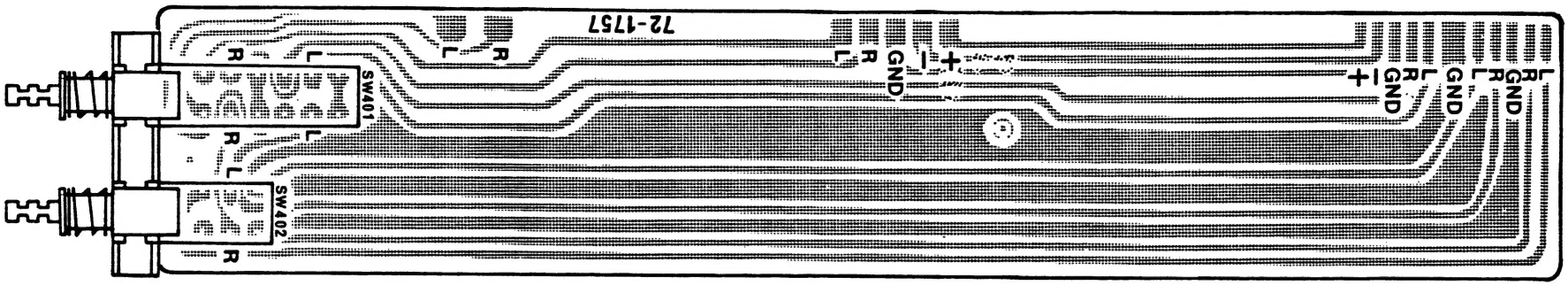

COMPONENT LOCATION SW WIRING UNIT (01-3303-21)

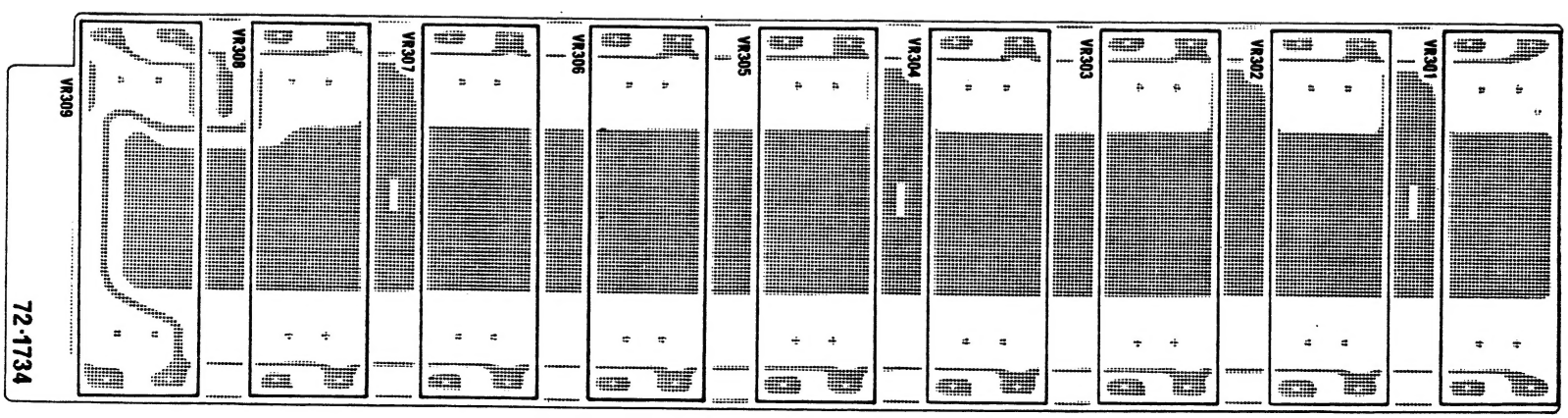

COMPONENT LOCATION – CONTROL UNIT (GC 02-2045)

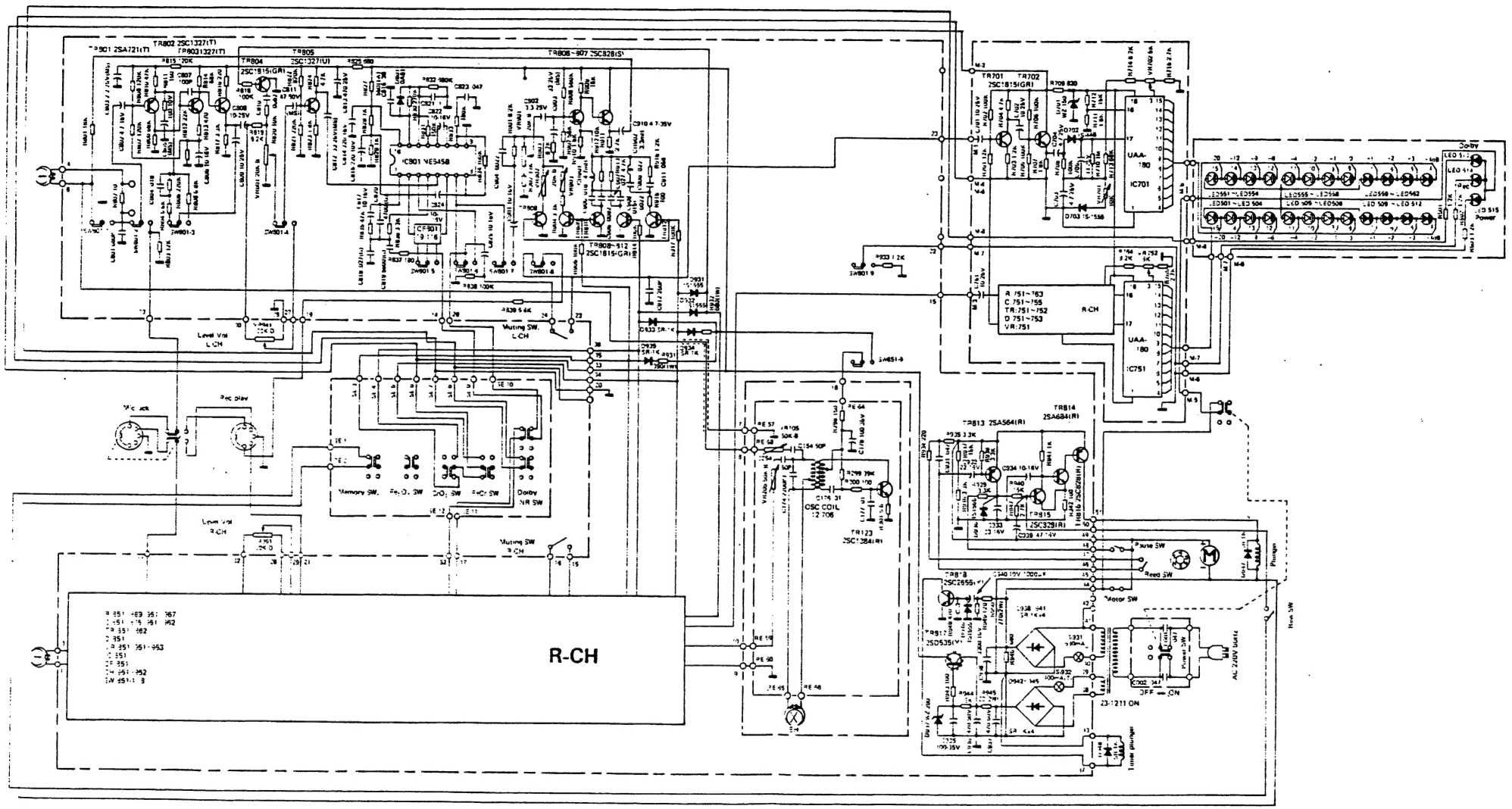
R-CH
Mini 300 D
01-3302

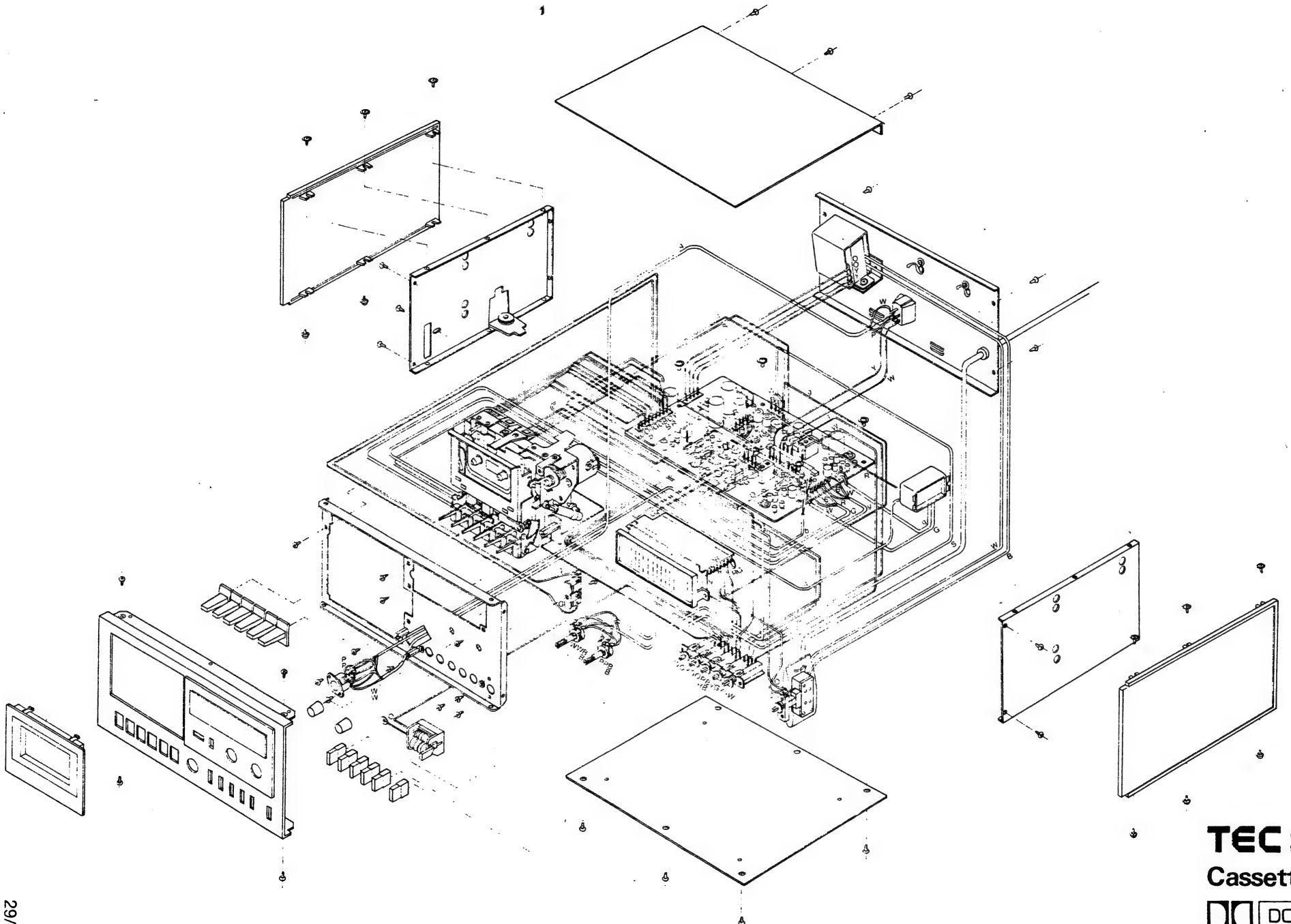

TEC system m 300

Cassette Deck

DOLBY SYSTEM®

29/60

MODEL TN-57DX-37

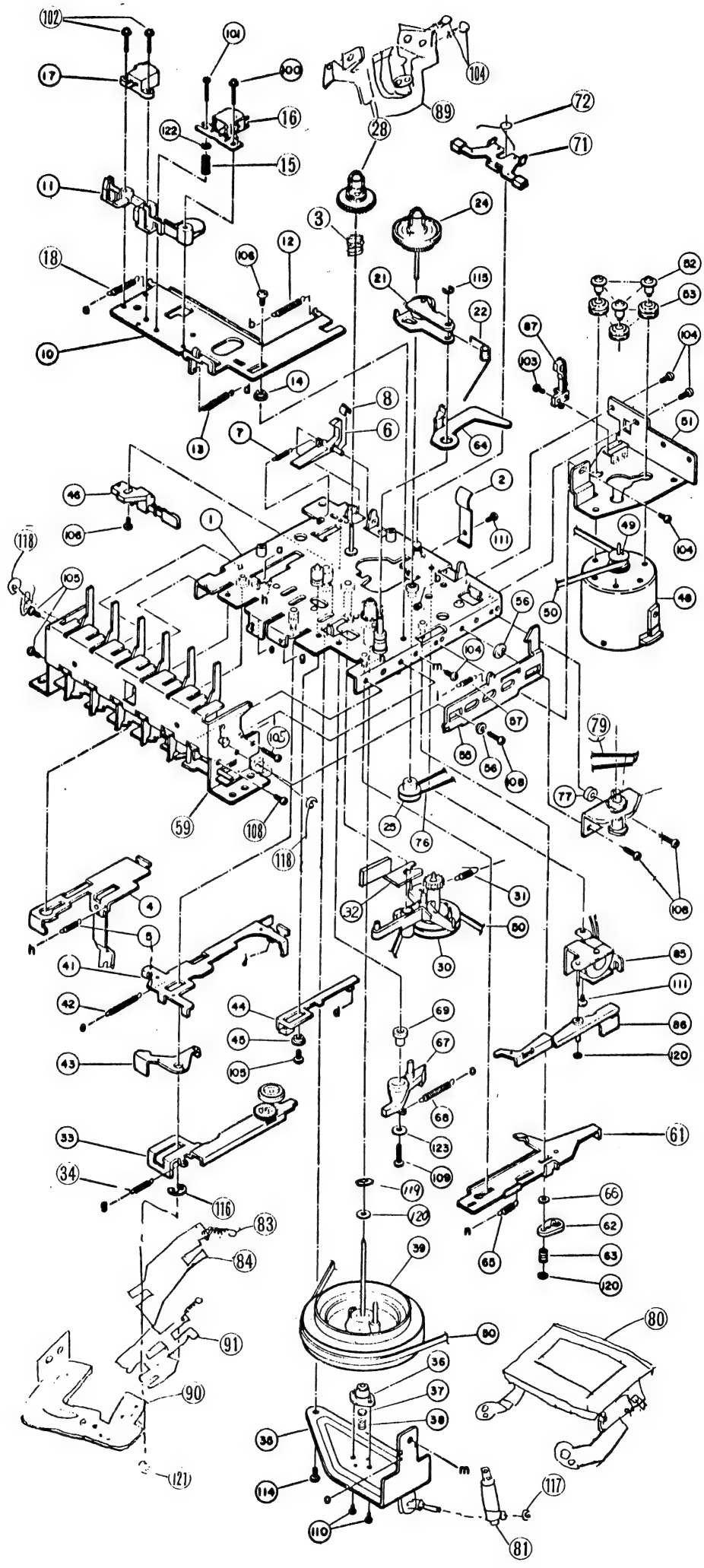

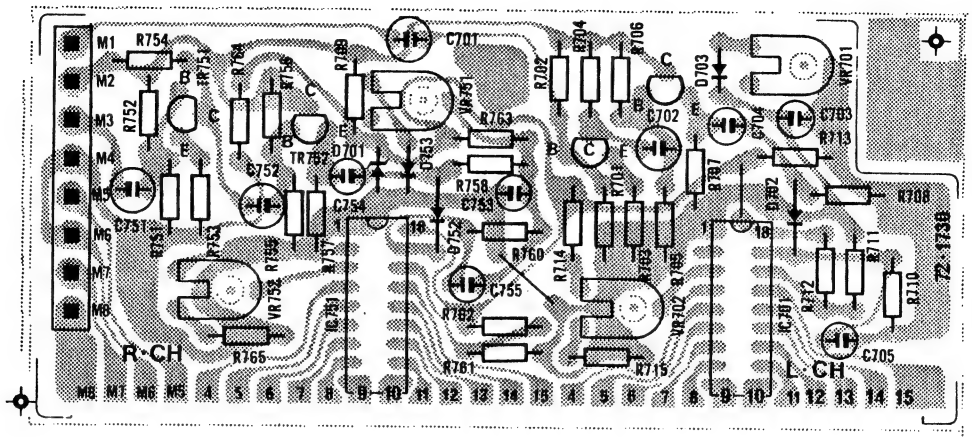

COMPONENT LOCATION – DIGITAL LEVEL METER UNIT (02-6018)

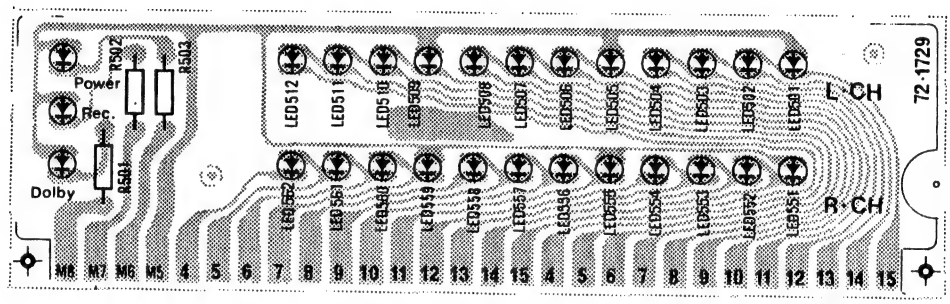

COMPONENT LOCATION – LED DISPLAY UNIT (02-6018)

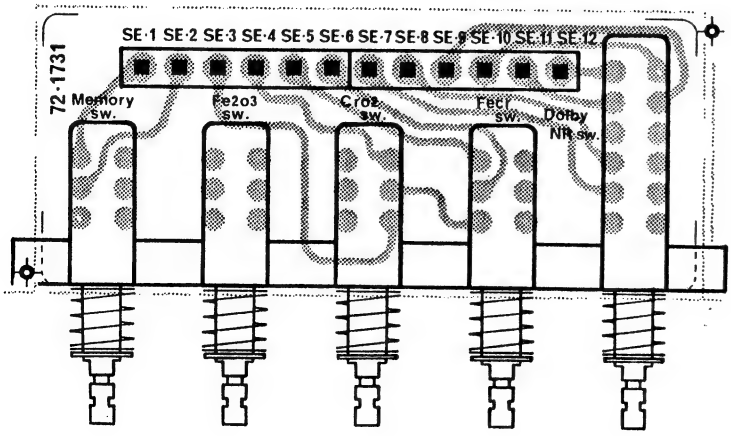

COMPONENT LOCATION – SELECTOR UNIT (01-3302-21)

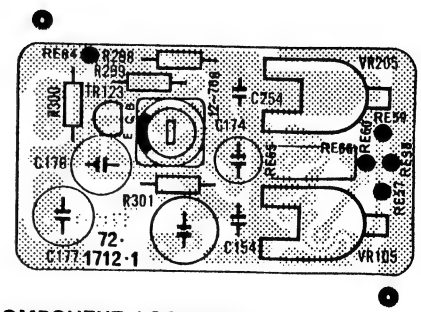

COMPONENT LOCATION

BIAS OSCILLATOR UNIT

(02-6016)

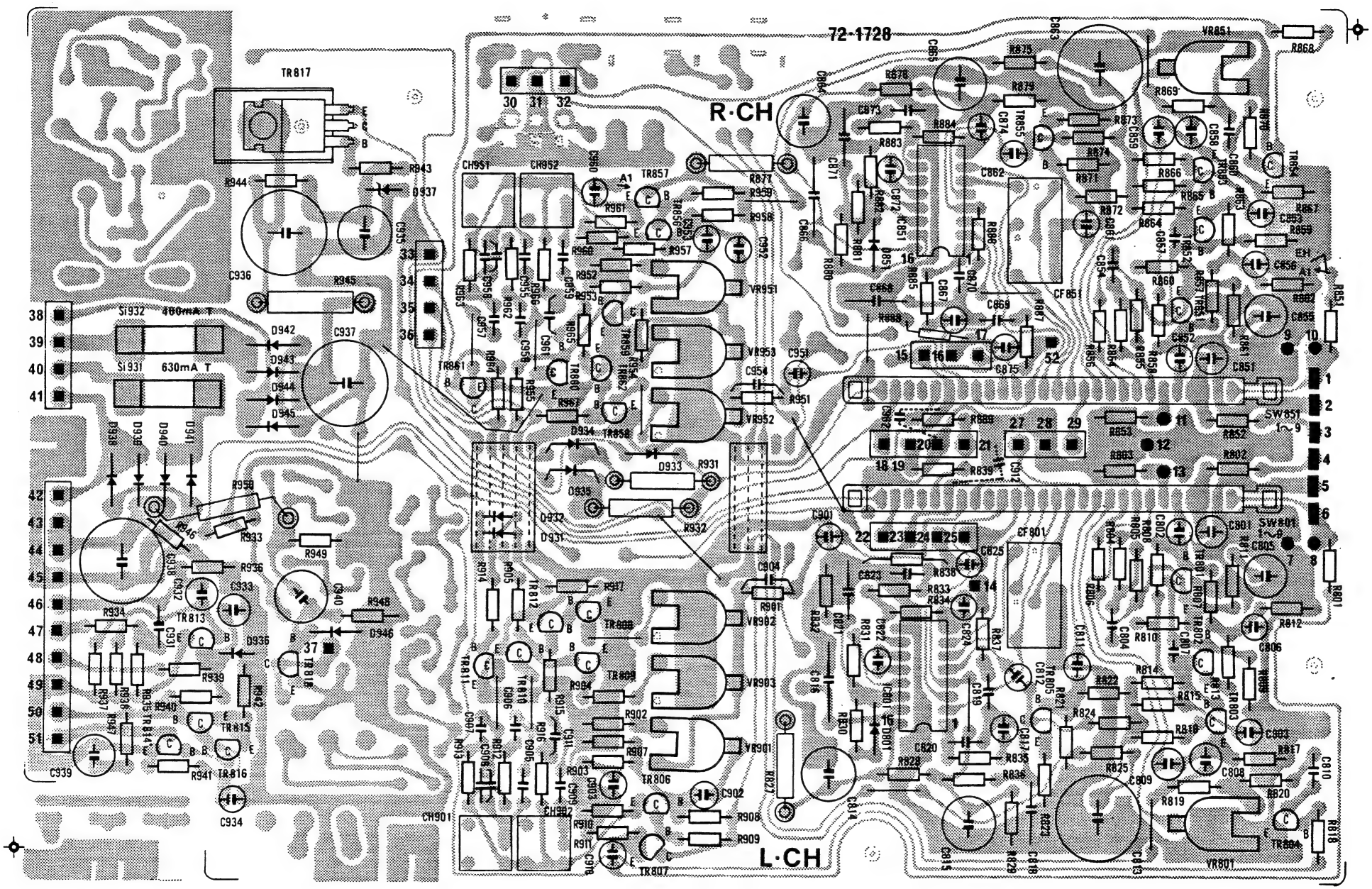

COMPONENT LOCATION – RECORDING PLAYBACK AMP. UNIT (02-428)

IC101 TERMINAL ASSIGNMENTS

PIN	FUNCTION
1	AM OUT
2	10HRS B & C
3	HRS F
4	HRS G
5	HRS A
6	HRS B
7	HRS D
8	HRS C
9	HRS E
10	10MINS F
11	10MINS G
12	10MINS A & D
13	10MINS B
14	10MINS E
15	10MINS C
16	MINS F
17	MINS G
18	MINS A
19	MINS B
20	MINS E
21	SUB (−)
22	NC
23	MINS D
24	MINS C
25	OUTPUT COMMON SOURCE
26	SNOOZE INPUT
27	ALARM OUTPUT
28	ALARM OFF INPUT
29	SLEEP OUTPUT
30	VSS (−)
31	VDD (+)
32	SLEEP DISPLAY INPUT
33	ALARM DISPLAY INPUT
34	SECONDS DISPLAY INPUT
35	SLOW SET INPUT
36	FAST SET INPUT
37	50 60Hz CP INPUT
38	50 60Hz SELECT
39	BLANKING INPUT
40	12 24HR SELECT
41	1Hz OUTPUT
42	PM OUTPUT

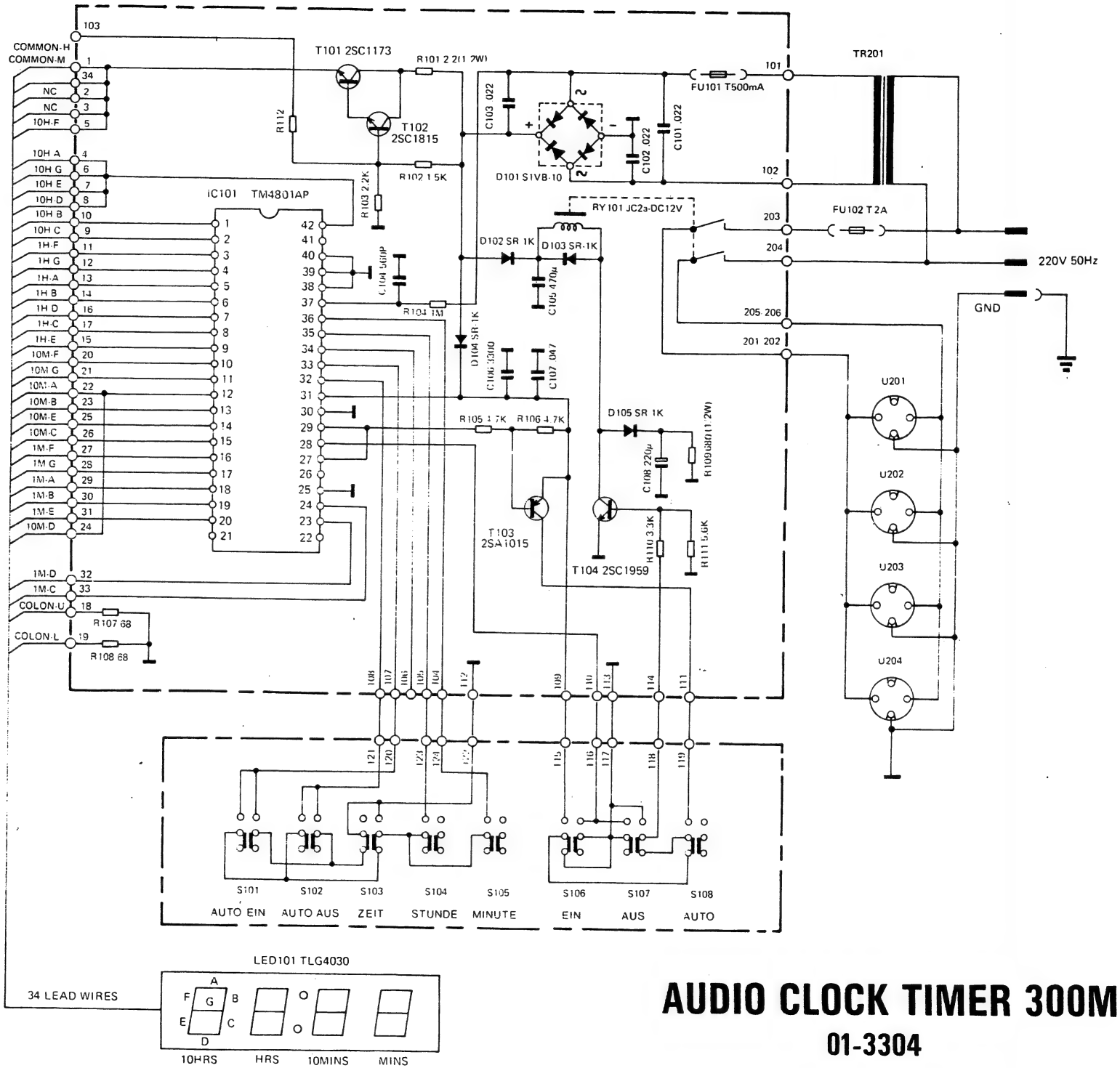

AUDIO CLOCK TIMER 300M

01-3304

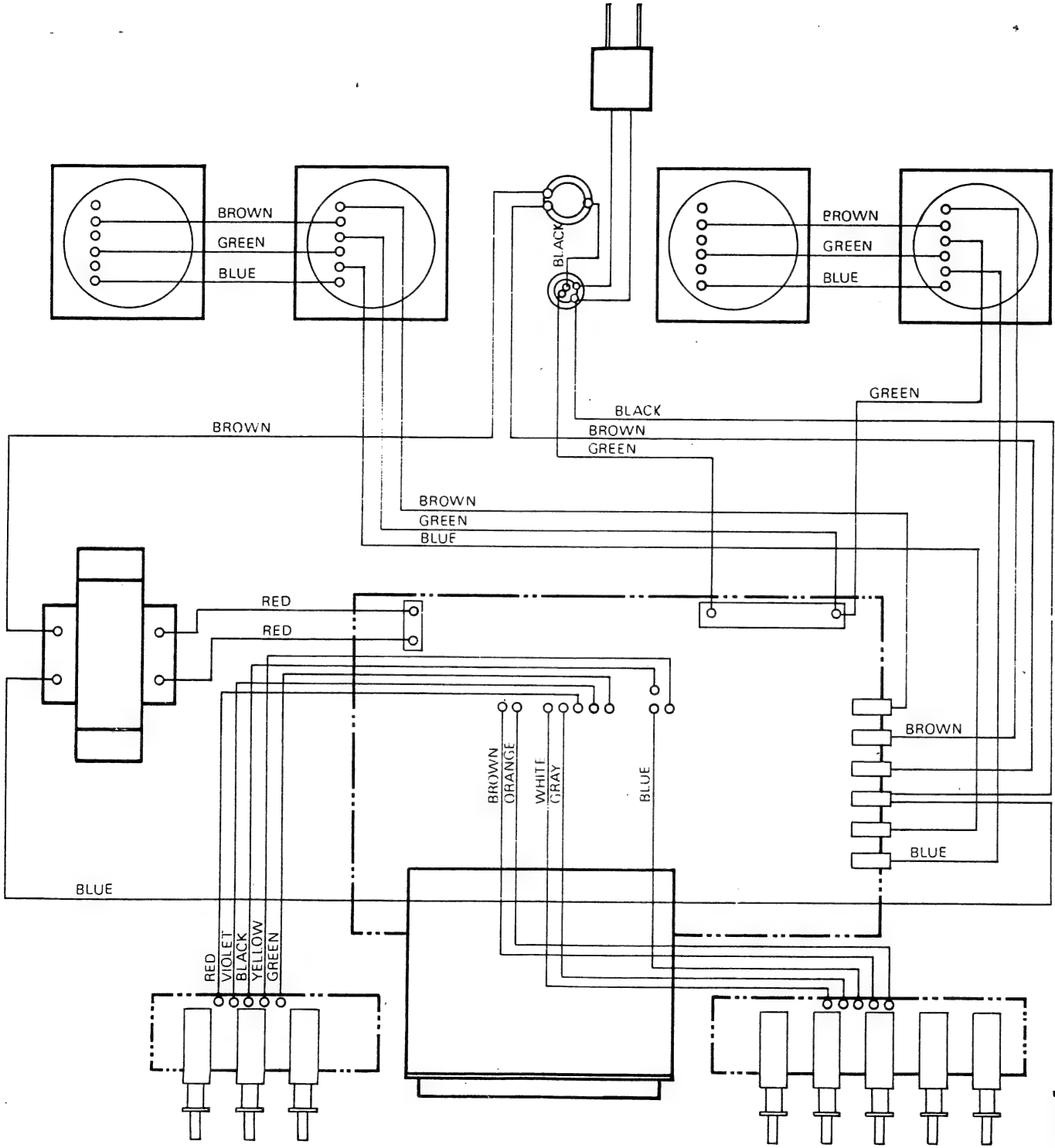

TEC system m 300
Audio Clock Timer

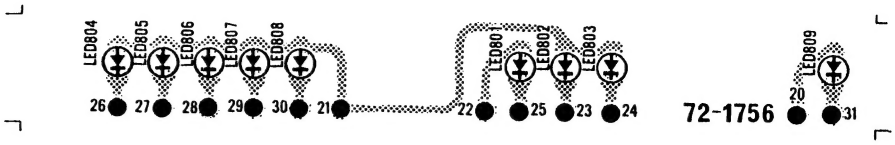

COMPONENT LOCATION – LED UNIT (01-3300-11)

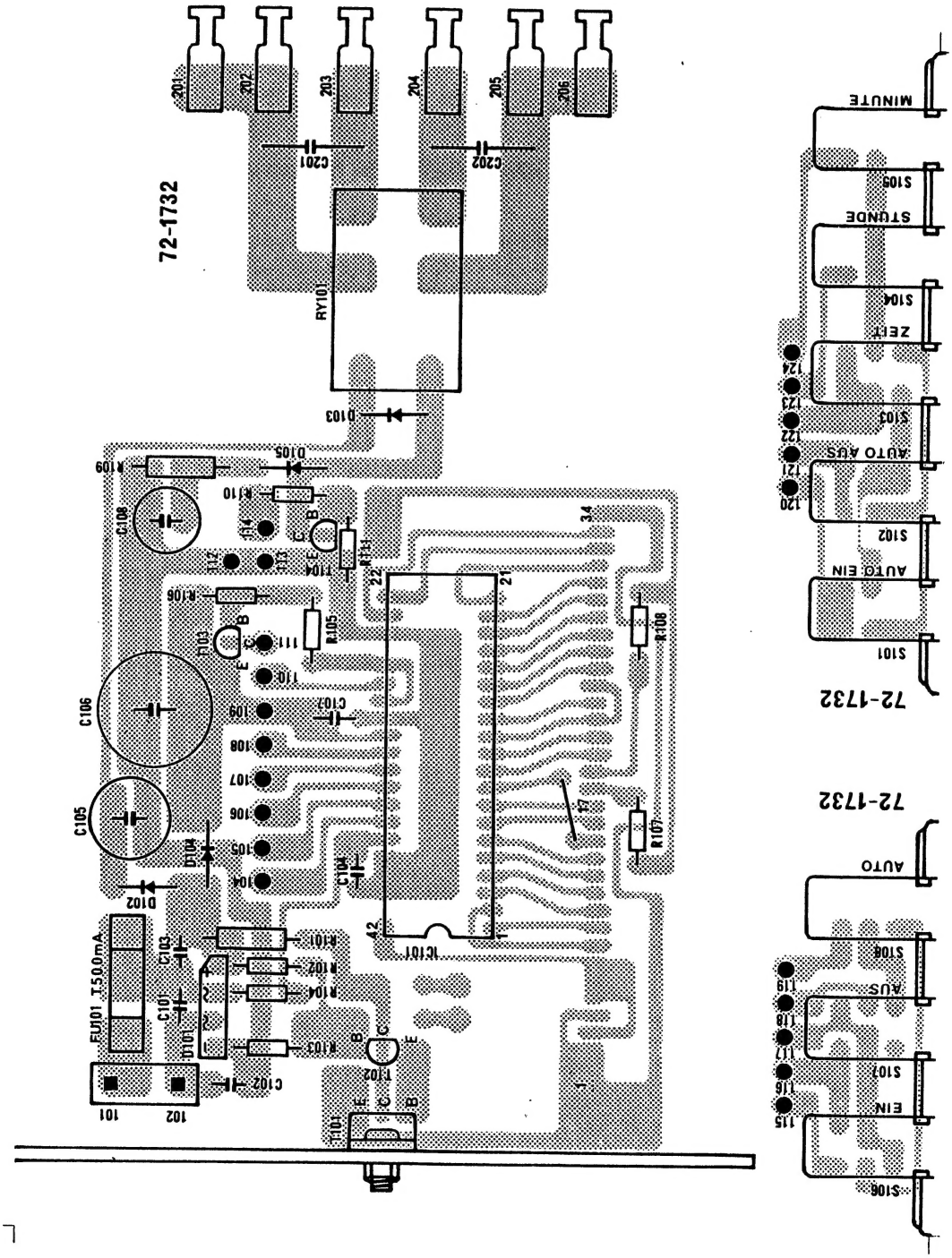

COMPONENT LOCATION – AUDIO CLOCK TIMER UNIT (04-4005)

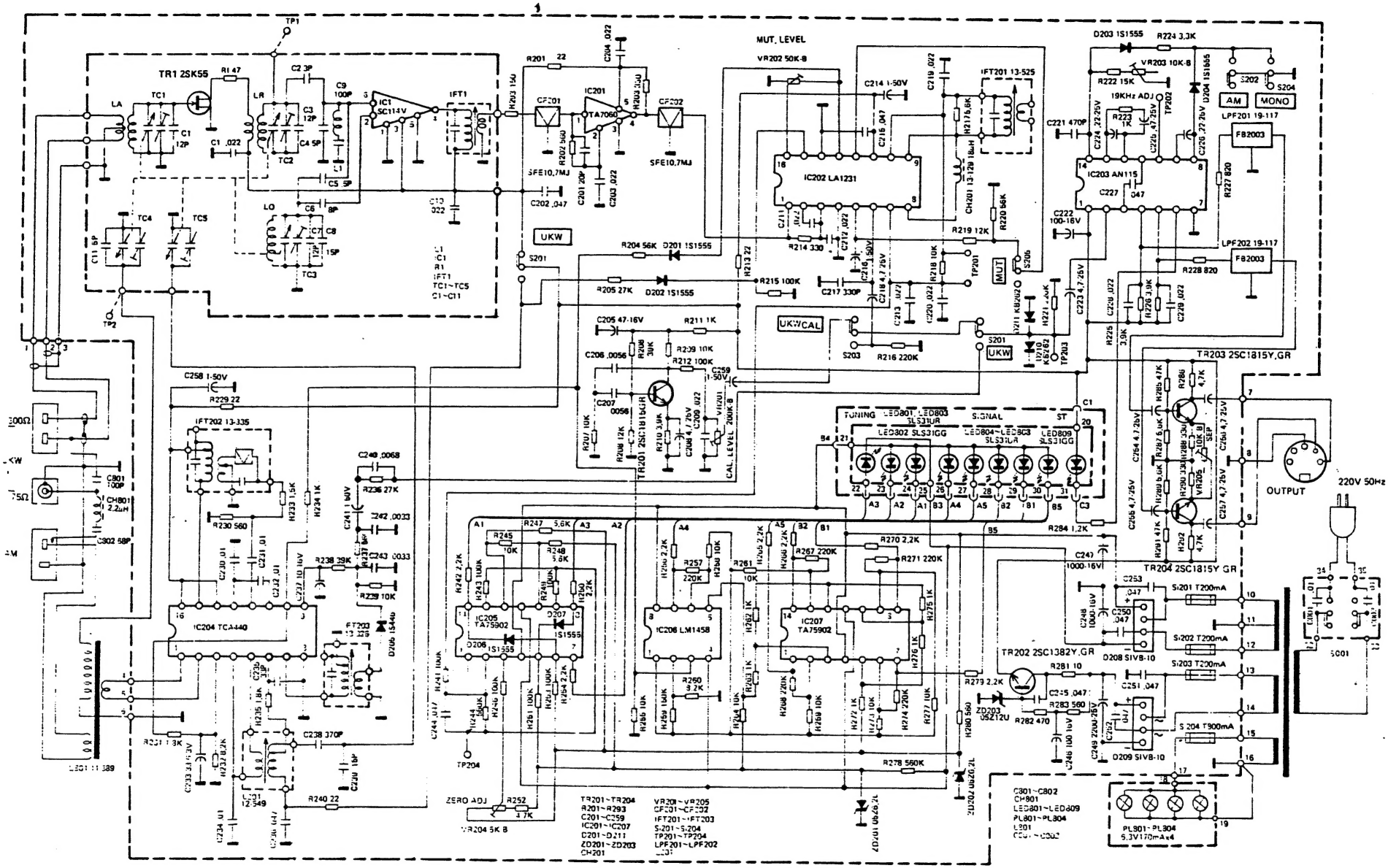

TEC 300T

01-3300

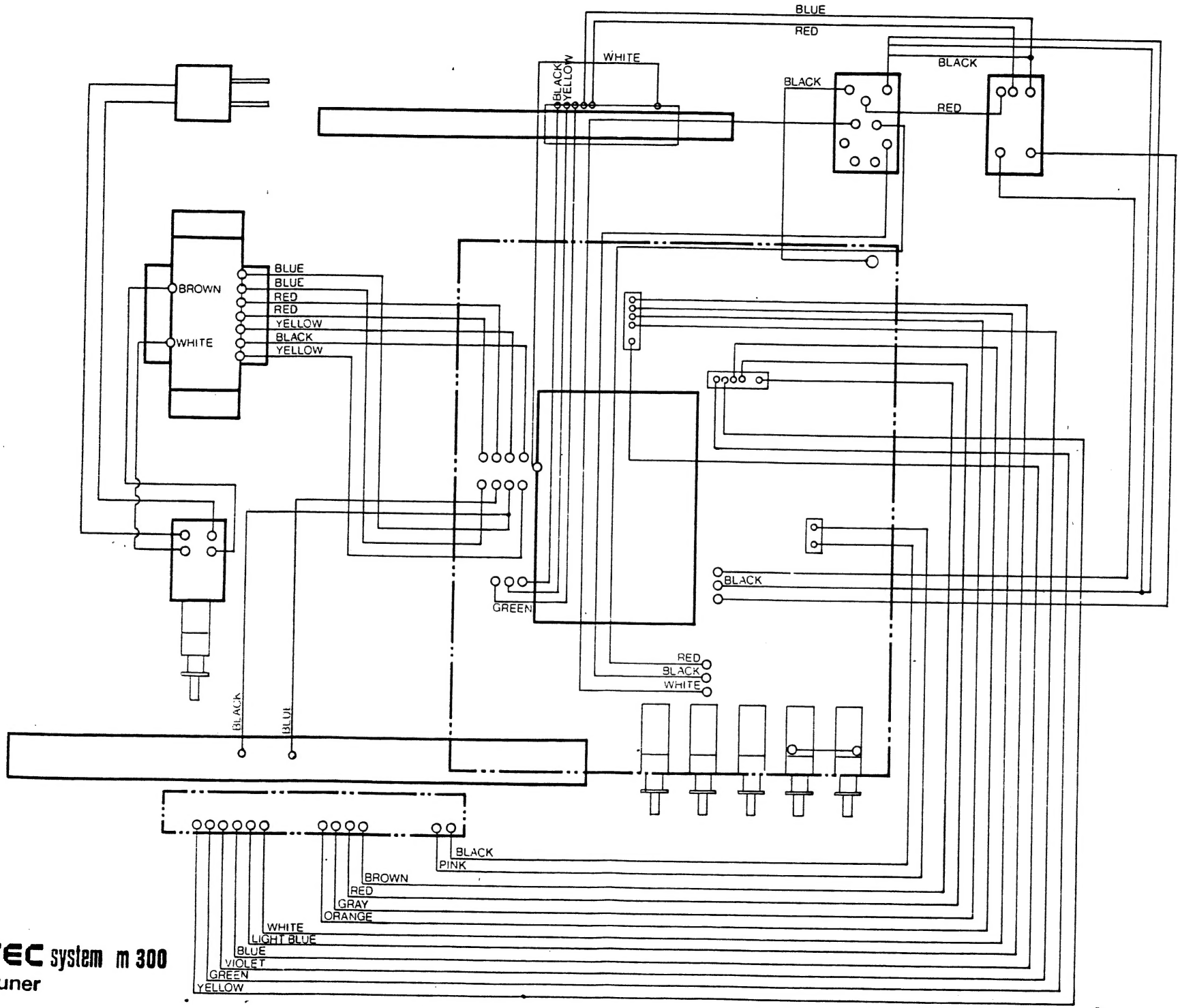

TEC system m 300
Tuner

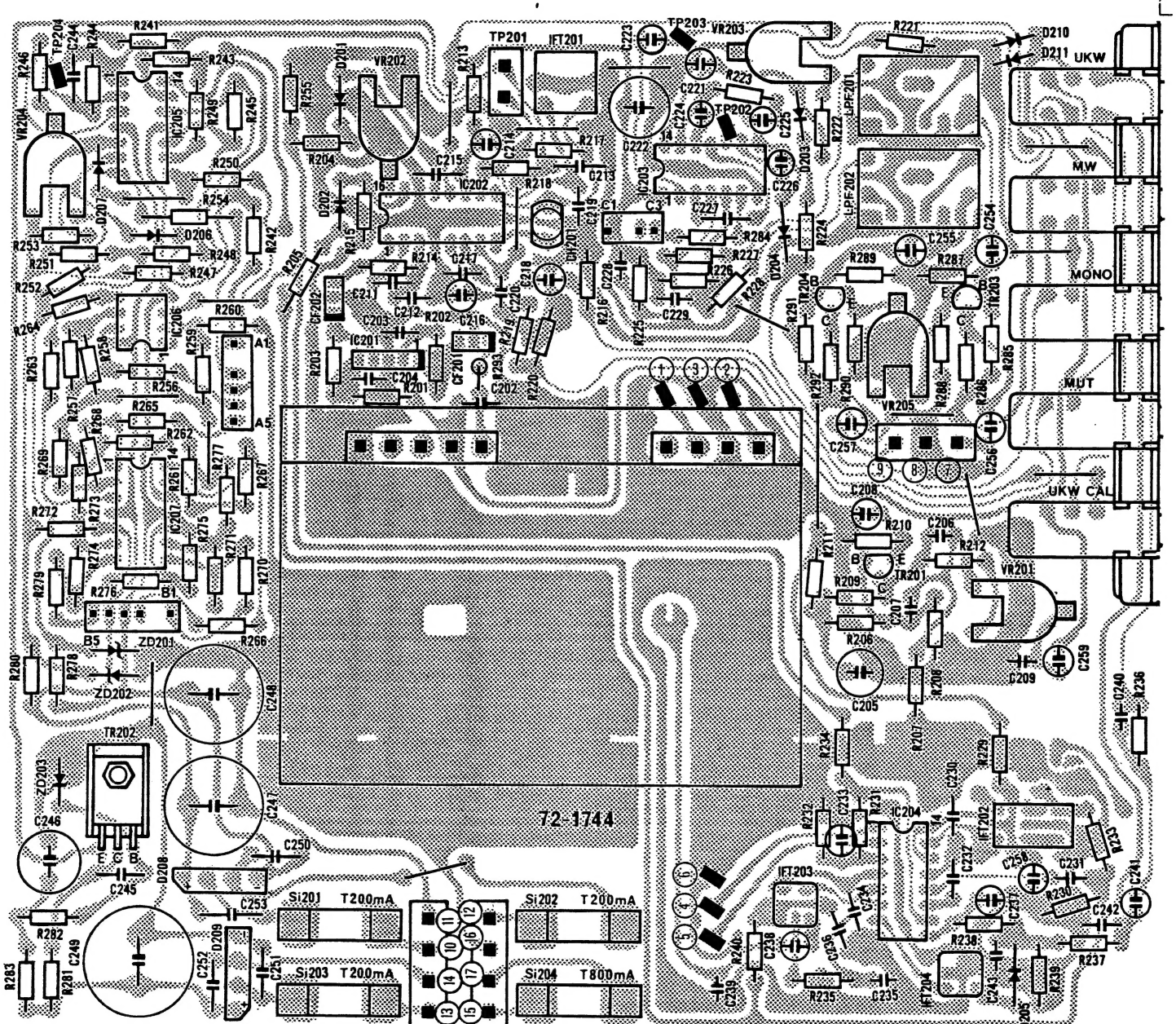

COMPONENT LOCATION – TUNER UNIT (01-6039)